Code conversions and Rotation

Submitted by:

Name	**ID**
Nawaf Alabdi	B00093759
Ali Abdelatief	B00099836

Submitted to:

Ms. Salsabeel Shapsough

Lab Instructor

American University of Sharjah

College of Engineering

Submitted on:

10/14/2024

Abstract

In this lab we will be making practical use of truth tables and Karnaugh maps to design functions that implement complex operations. Specifically, we will be implementing circuits that model a given Karnaugh-map specification, a bit rotation operation, and a grey-code encoder

Introduction

In this lab, we will start by practicing simplification of Boolean expressions using K-maps and implementing the simplified expression on a breadboard. Afterwards, we will design a circuit that allows us to perform bit rotation using 3 bits. Bit rotation is where the bits are shifted to one side, and the bit that is kicked out of the bit combination at one end is inserted back at the other end. We will come up with the truth table, extract the minterms, obtain three outputs (one for each bit) and simplify each output, then implement it on a breadboard. Finally, we will design a circuit that allows us to represent binary numbers using Gray Code using a truth table provided for us, which we will then implement as well.

Theoretical Background

Karnaugh maps and truth tables are tabular representations of functions that map all the possible input combinations to their respective outputs.

In a truth table, all the combinations that map to 1 are evident, hence it is trivial to extract a sum of minterms expression that is represents the table. We start by looking at each entry that maps to 1 and noting down each digit and its corresponding Boolean variable. We write the string of variables (as a product) and add a complement whenever the corresponding digit is a zero. Summing all these entries together gives us a sum of minterms (SOP) expression. We can equivalently express the function as a product of sums by looking at each entry that maps to 0 and noting down each digit, this time we add a complement whenever we see a 1 and the variables in each entry are summed together to form a single minterm rather than multiply together. Then we multiply all the entries together.

In a Karnaugh map, we group cells with 1s in squares or rectangles of sizes that are powers of 2. (1,2,4,8,...). Then by noting down the common variables (making sure to add the complement sign whenever the common variable has a zero digit), we can get the terms that cover all the cells that map to 1. We then sum all these terms together to get a simple function equivalent to the Karnaugh map. To get a product of sum expression, find the K-map of the complement, use the same technique, then use DeMorgan's laws to get back to the normal function.

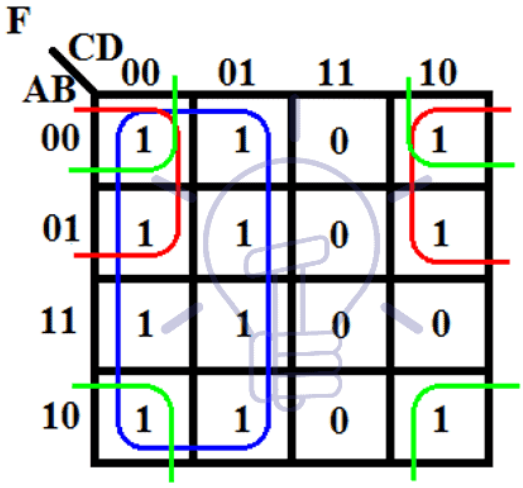

Figure 1: An example of a Karnaugh map that represents a Boolean function, and how the groupings are made. Credit: https://www.electricaltechnology.org/wp-content/uploads/2018/04/4-variable-k-map-Example.png

A bit rotation is an operation that takes a string of binary digits and moves the last digit to the front such that all the other bits keep the same relative sequence.

For example, 010 becomes 001. 110 becomes 011, and so on.

A grey code is a binary representation of decimal numbers such that only one bit changes at a time, according to the given table below.

Decimal	Gray Code	Binary
0	0000	0000
1	0001	0001
2	0011	0010
3	0010	0011
4	0110	0100
5	0111	0101
6	0101	0110
7	0100	0111
8	1100	1000
9	1101	1001
10	1111	1010
11	1110	1011
12	1010	1100
13	1011	1101
14	1001	1110
15	1000	1111

Figure 2 the gray-code binary representaiton of numbers, compared to the traditional binary representation. Credit: https://www.dynapar.com/hs-fs/hubfs/uploadedImages/_Site_Root/Gray-Code-Encoder-Output.jpg?width=219&height=319&name=Gray-Code-Encoder-Output.jpg

Experimental work, Results and Discussion

Lab Exercises:

Exercise 1:

From the K-map in Figure 3

	C’D’ 0 0	C’D 0 1	CD 1 1	CD’ 1 0
A’B’ 0 0	1	0	1	1
A’B 0 1	0	0	0	0
AB 1 1	0	0	1	1
AB’ 1 0	1	1	1	1

Figure 3. F (A, B, C, D)

a. Simplify the circuit.

AB \ CD	00	01	11	10
$A'B'$ 00	1	0	1	1
01	0	0	0	0
11	0	0	1	1
10	1	1	1	1

$$\boxed{F(A,B,C,D) = \bar{B}\bar{D} + \bar{B}\bar{C} + AC + A\bar{B} \quad \text{SoP}}$$

$$= (A+\bar{B})(\bar{B}+C)(A+C+\bar{D}) \quad \text{PoS}$$

b. Simulate the simplified circuit on LogiSim.

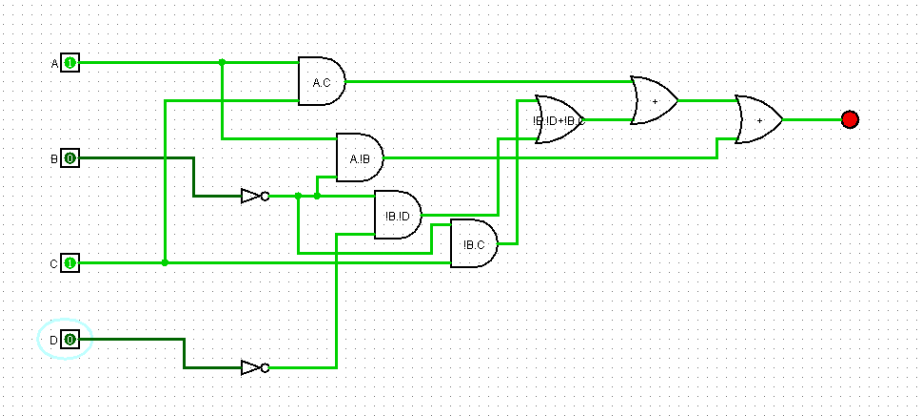

c. Implement the simplified circuit on the breadboard.

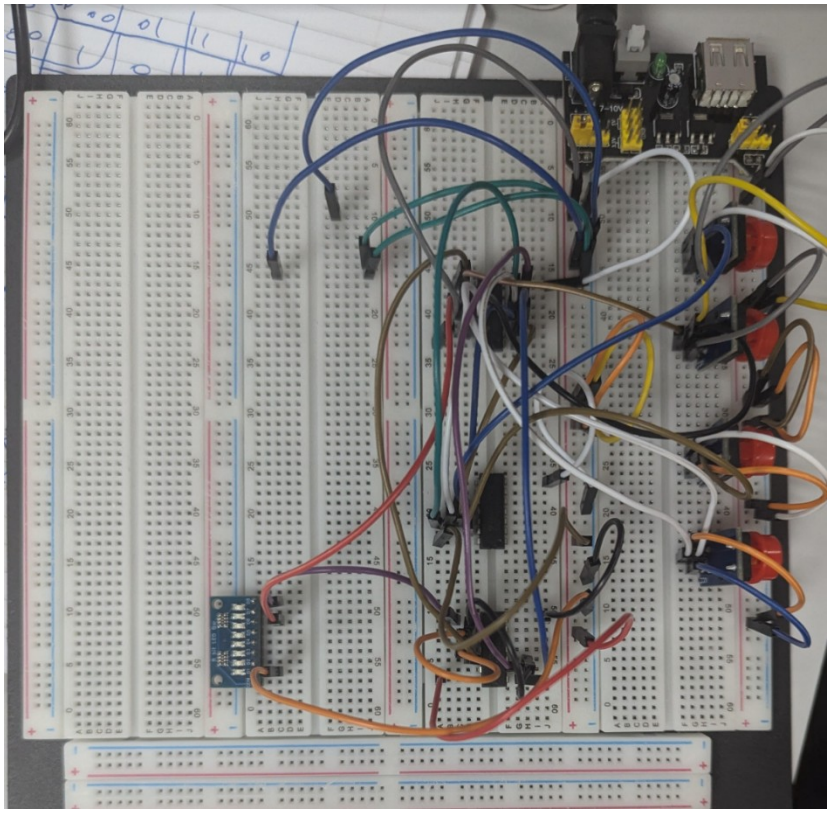

Exercise 2:

Bit rotation is an operation similar to shift except that the bits that fall off at one end are put back to the other end. In left rotation, the bits that fall off at left end are put back at right end. In right rotation, the bits that fall off at the right end are put back at the left end.

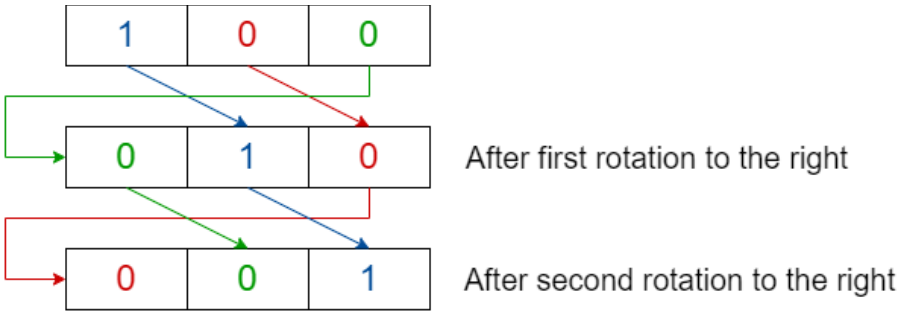

a. Build the truth table for a circuit that takes a 3-bit binary number as input and outputs the 3-bit binary number after a rotation of one position to the right.

(a)

A	B	C	~~F(A,B,C)~~	X	Y	Z
0	0	0		0	0	0
0	0	1		1	0	0
0	1	0		0	0	1
0	1	1		1	0	1
1	0	0		0	1	0
1	0	1		1	1	0
1	1	0		0	1	1
1	1	1		1	1	1

b. Simply the expression by extracting the SOP and applying Boolean algebra rules.

(b) $X(A,B,C) = \Sigma(1,3,5,7)$

$$= \bar{A}\bar{B}C + \bar{A}BC + A\bar{B}C + ABC$$
$$= \quad // \quad // \quad + AC(\bar{B}+B)$$
$$= \bar{A}\bar{B}C + \bar{A}BC + AC$$
$$= \quad // \quad + C(\bar{A}B+A) \longrightarrow B\bar{A}+A = B+A = A+B$$
$$= \bar{A}\bar{B}C + C(A+B)$$
$$= \bar{A}\bar{B}C + AC + BC$$
$$= C(\bar{A}\bar{B}+A) + BC \longrightarrow \bar{B}\bar{A}+A = \bar{B}+A = A+\bar{B}$$
$$= C(A+\bar{B}) + BC$$
$$= AC + \bar{B}C + BC \qquad BC+BC = BC \quad (X+X=X)$$
$$= \cancel{AC+BC}\ C(\bar{B}+B+A) = C \qquad \rightarrow (\bar{B}+B)+A = 1+A = 1$$

AB \ BC	00	01	11	10
0	0	1	1	0
1	0	1	1	0

$\rightarrow$ S.o.P $= C$

$Y = \Sigma(4, 5, 6, 7)$

$= A\bar{B}\bar{C} + A\bar{B}C + AB\bar{C} + ABC$

$= // + // + AB(\bar{C}+C) \rightarrow AB(\bar{C}+C) = AB(1) = AB$

$= A\bar{B}\bar{C} + A\bar{B}C + AB$

$= A(\bar{B}\bar{C} + \underbrace{\bar{B}C + B}) \rightarrow \bar{B}C + B = C\bar{B} + B = B + C$

$= A(B + C + \bar{B}\bar{C})$

$= AB + AC + A\bar{B}\bar{C}$

$= \sim(\overline{AB + AC + A\bar{B}\bar{C}})$

$= \sim[[(\bar{A}+\bar{B})(\bar{A}+\bar{C})](\bar{A}+B+C)] \rightarrow \cancel{(\bar{A}+\bar{B}+0)(A}$

$= \sim[(\bar{A}\bar{A} + \bar{A}\bar{C} + \bar{A}\bar{B} + \bar{B}\bar{C})(\bar{A}+B+C)]$

$= \sim[(\underline{\bar{A} + \bar{A}\bar{C} + \bar{A}\bar{B}} + \bar{B}\bar{C})(\bar{A}+B+C)]$ $\quad \bar{A} + \bar{A}\bar{C} + \bar{A}\bar{B}$
$= \bar{A}(1 + \bar{C} + \bar{B}) = \bar{A}$

$= \sim[(\bar{A} + \bar{B}\bar{C})(\bar{A}+B+C)]$

$= \sim[\overset{=\bar{A}}{\cancel{\bar{A}\bar{A}}} + \bar{A}B + \bar{A}C + \bar{A}\bar{B}\bar{C} + \overset{0}{\cancel{\bar{B}B\bar{C}}} + \overset{0}{\cancel{\bar{B}\bar{C}C}}]$

$= \sim[\bar{A}(\cancel{\bar{A}}\ 1 + B + C + \bar{B}\bar{C})]$

$= \sim\bar{A} = A.$

A \ BC	00	01	11	10
0	0	0	0	0
1	1	1	1	1

S.o.P
$= A.$ ✓

$$Z(A,B,C) = \Sigma(2,3,6,7)$$

$$= \bar{A}B\bar{C} + \bar{A}BC + AB\bar{C} + ABC$$

$$= \text{''} + \text{''} + AB(\bar{C}+C) \longrightarrow AB(\bar{C}+C) = AB(1) = AB$$

$$= \bar{A}B\bar{C} + \bar{A}BC + AB$$

$$= B(\bar{A}\bar{C} + \bar{A}C + A)$$

$$= B(\bar{A}\bar{C} + A + C)$$

$$= B(A + \bar{C} + C) \qquad A + \bar{C} + C = A + 1 = 1$$

$$= B(1)$$

$$= B$$

A \ BC	00	01	11	10
0	0	0	1	1
1	0	0	1	1

S.O.P

$= B$.

$\therefore X(A,B,C) = C$

$Y(A,B,C) = A$

$Z(A,B,C) = B$

c. Verify your answer using a 3 variable Karnaugh map.

(check the attached photo above.)

d. Simulate your circuit.

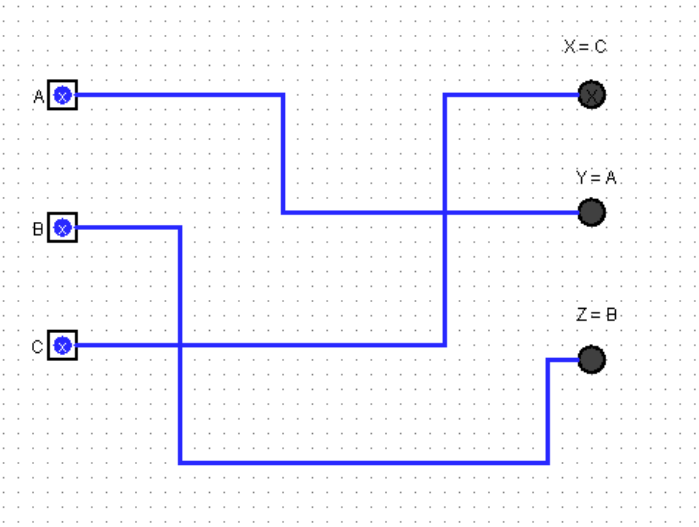

e. Implement and verify the operation .

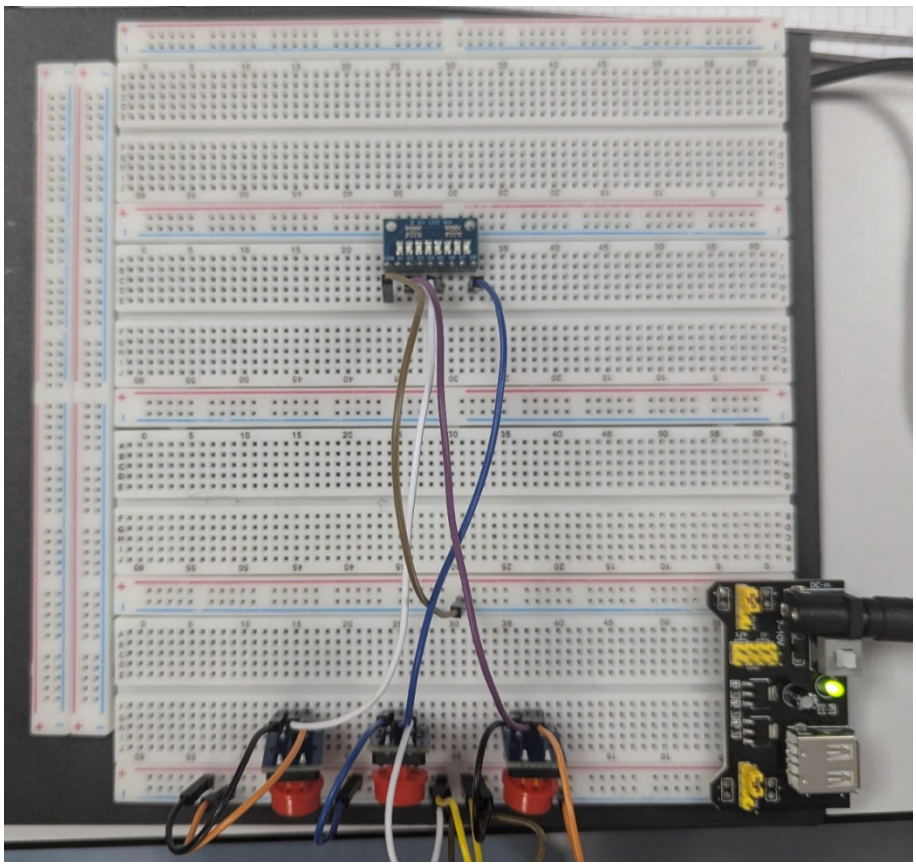

Exercise 3:

The positional encoder in Figure 1 uses Gray code to represent the position of the pointer. E.g. when the pointer is in the 3rd area, the output is 0010. Gray code is one of the codes used in digital systems. It has the

advantage over binary numbers in that only one bit in the code word changes when going from one number to the next, which eliminates the error when the pointer moves between areas. Example: Gray Code 0101 represents the Binary Code 0110, i.e., 6.

a. Design a combinational circuit with four inputs and four outputs that converts the four-bit binary number into an equivalent Gray Code. You may refer to the truth table below.
b. Use the Karnaugh map technique to simplify the expression. Hint: You can rewrite the expression to use the minimum number of gates.

01.

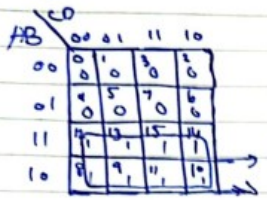

s.o.P = A.

$\boxed{01 = A}$

02

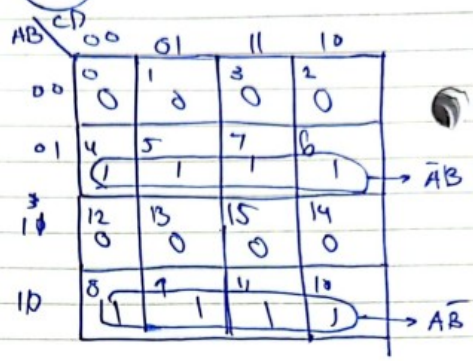

s.o.P = $\bar{A}B + A\bar{B}$

$\boxed{02 = A \oplus B}$ XOR

03

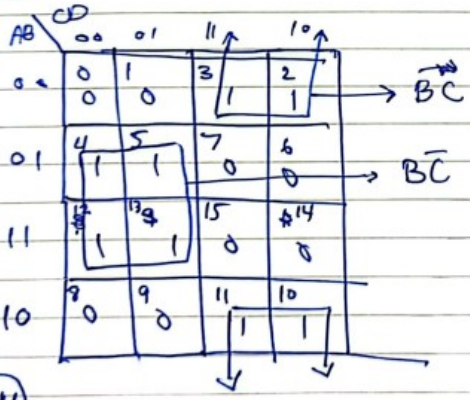

s.o.P = $\bar{B}C + B\bar{C}$

$\boxed{03 = B \oplus C}$

04

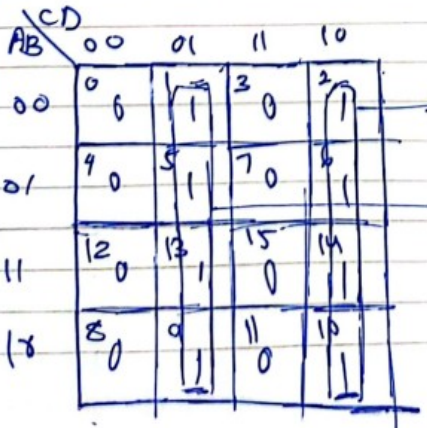

s.o.P = $\bar{C}D + C\bar{D}$

$\boxed{04 = C \oplus D}$

c. Simulate the circuit of the simplified form

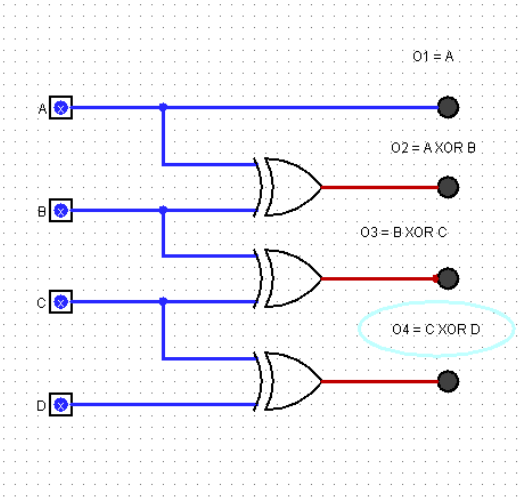

d. Implement and verify the operation

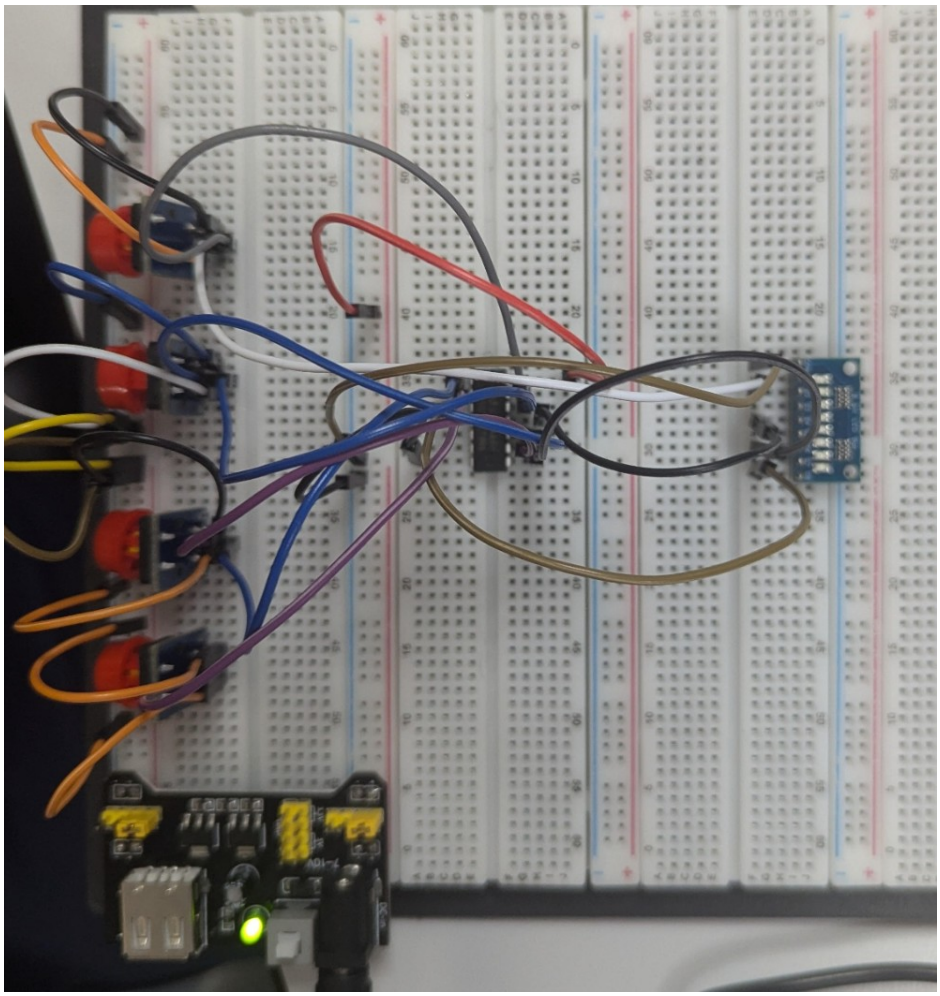

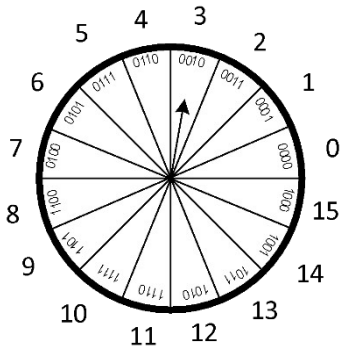

	A	B	C	D	O1	O2	O3	O4
0	0	0	0	0	**0**	**0**	**0**	**0**
1	0	0	0	1	**0**	**0**	**0**	**1**
2	0	0	1	0	**0**	**0**	**1**	**1**
3	0	0	1	1	**0**	**0**	**1**	**0**
4	0	1	0	0	**0**	**1**	**1**	**0**
5	0	1	0	1	**0**	**1**	**1**	**1**
6	0	1	1	0	**0**	**1**	**0**	**1**
7	0	1	1	1	**0**	**1**	**0**	**0**
8	1	0	0	0	**1**	**1**	**0**	**0**
9	1	0	0	1	**1**	**1**	**0**	**1**
10	1	0	1	0	**1**	**1**	**1**	**1**
11	1	0	1	1	**1**	**1**	**1**	**0**
12	1	1	0	0	**1**	**0**	**1**	**0**
13	1	1	0	1	**1**	**0**	**1**	**1**

14	1	1	1	0	**1**	**0**	**0**	**1**
15	1	1	1	1	**1**	**0**	**0**	**0**

Conclusion

In this lab, we went over new concepts such as binary rotation and Gray Code, as well as revisiting previous concepts such as simplification using K-maps and Boolean rules. We also designed circuits representing each concept and implemented them on a breadboard.